Historic, Archive Document

Do not assume content reflects current scientific knowledge, policies, or practices.

1.9
R53Ne

THE NEWS LETTER
OF THE
BUREAU OF PUBLIC ROADS

LIBRARY
RECEIVED
★ FEB 5 1926 ★
U. S. Department of Agriculture

VOL. 1, NO. 3 JANUARY, 1926.

CONTENTS

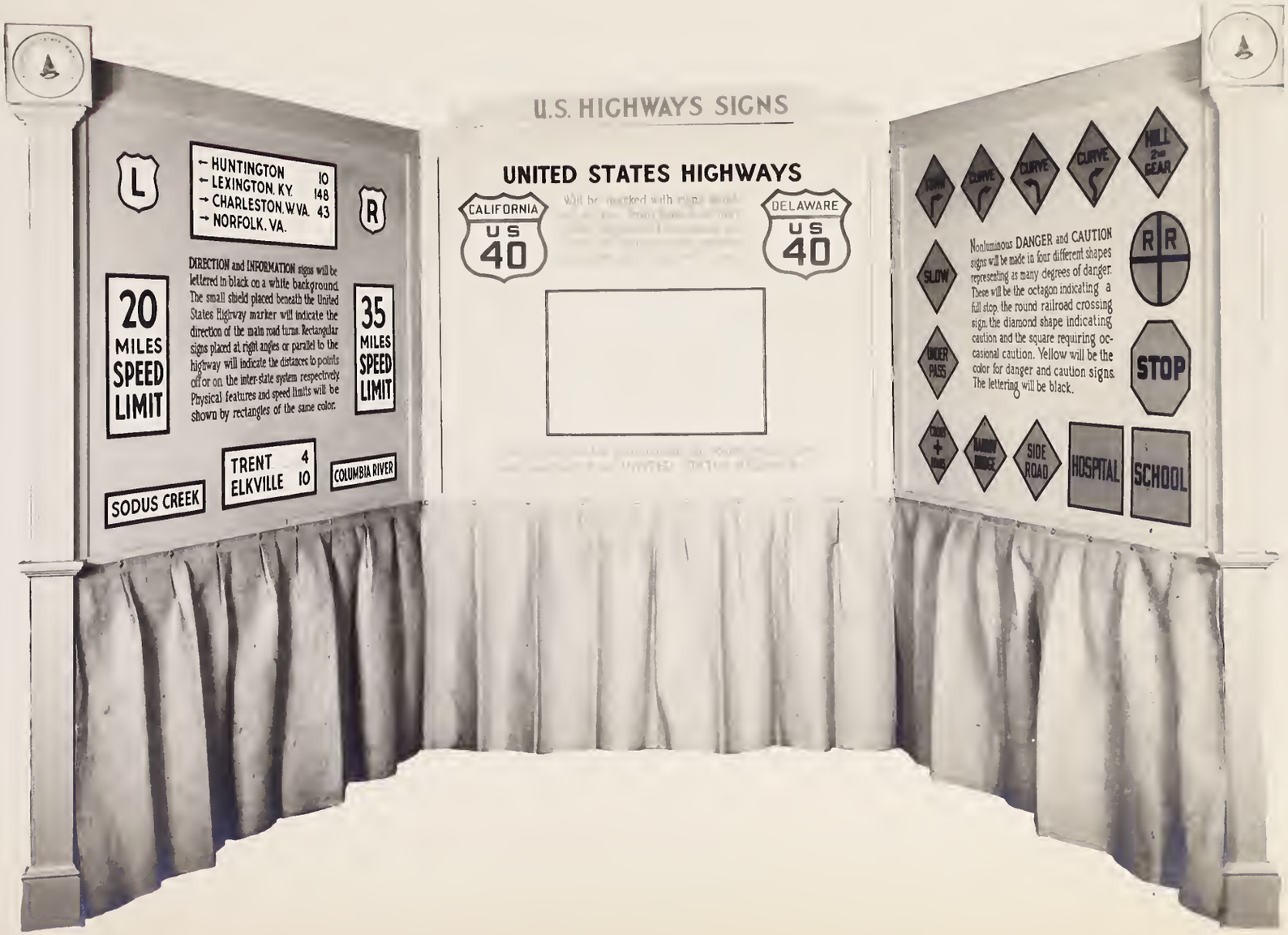
U.S. HIGHWAYS SIGNS
L
← HUNTINGTON 10
← LEXINGTON, KY. 148
→ CHARLESTON, W.VA. 43
→ NORFOLK, VA.
R
DIRECTION and INFORMATION signs will be lettered in black on a white background. The small shield placed beneath the United States Highway marker will indicate the direction of the main road turns. Rectangular signs placed at right angles or parallel to the highway will indicate the distances to points off or on the inter-state system respectively. Physical features and speed limits will be shown by rectangles of the same color.
20 MILES SPEED LIMIT
35 MILES SPEED LIMIT
SODUS CREEK
TRENT 4
ELKVILLE 10
COLUMBIA RIVER
UNITED STATES HIGHWAYS
CALIFORNIA US 40
DELAWARE US 40
CURVE
CURVE
CURVE
HILL 2ND GEAR
SLOW
UNDER PASS
Nonluminous DANGER and CAUTION signs will be made in four different shapes representing as many degrees of danger. These will be the octagon indicating a full stop, the round railroad crossing sign, the diamond shape indicating caution and the square requiring occasional caution. Yellow will be the color for danger and caution signs. The lettering will be black.
R R
STOP
NARROW BRIDGE
SIDE ROAD
HOSPITAL
SCHOOL

EXTRACT FROM THE ADDRESS OF W. M. JARDINE, SECRETARY OF AGRICULTURE, BEFORE THE ANNUAL MEETING OF THE ILLINOIS AGRICULTURAL ASSOCIATION AT CHAMPAIGN, ILLINOIS, ON JANUARY 21, 1926.

* * * * * "AT THE PRESENT TIME LOCAL GOVERNMENT UNITS ARE CARRYING THE MAJOR PART OF THE BURDEN OF MAINTAINING SCHOOLS AND ROADS, WHICH MANIFESTLY ARE FUNCTIONS THE STATES SHOULD HELP SUPPORT. * * * * PUBLIC HIGHWAYS NO LONGER MERELY SERVE LOCAL COMMUNITIES. THEY HAVE COME TO BE USED VERY LARGELY FOR TRAFFIC OF WIDER PROPORTIONS. SUCH PUBLIC FUNCTIONS OF STATE-WIDE IMPORTANCE SHOULD BE SUPPORTED BY THE STATE AS A UNIT RATHER THAN LARGELY BY INDEPENDENT UNITS AS AT PRESENT. SUCH A REDISTRIBUTION OF THE TAX BURDEN WOULD CARRY WITH IT THE DEVELOPMENT OF NEW SOURCES OF REVENUE TO SUPPLEMENT THE GENERAL PROPERTY TAX WHICH NOW BEARS DOWN WITH PARTICULAR FORCE UPON THE FARMER.

"THE WHOLE PRESENT SYSTEM OF TAXATION IS BASED UPON THE CONDITIONS OF FOUR GENERATIONS AGO. THE UNIT OF LEVY FOR SOME PURPOSES IS TOO SMALL. A DISPROPORTIONATE PART OF THE TAXES FOR STATE USE IS STILL DRAWN FROM REAL ESTATE. THE MOVEMENT OF OLD-TIME INDUSTRIES FROM COUNTRY TO CITY HAS NEVER BEEN ALLOWED FOR IN SHAPING THE TAXATION POLICY. IT IS TIME NOW THAT WE HAVE SOME BROADENING OF THE SUPPORT FOR INSTITUTIONS LIKE SCHOOLS AND ROADS THAT SERVE ALL THE PEOPLE. THE CITIES WILL EVENTUALLY HAVE TO ASSUME A SHARE OF THE TAX BURDEN MORE IN KEEPING BOTH WITH RESPECT TO BENEFITS DERIVED AND LIKEWISE ABILITY TO PAY. * * * *

"WE HAVE ENTERED UPON A PERIOD OF REMARKABLE DEVELOPMENT IN OUR HIGHWAY SYSTEM, A DEVELOPMENT CONDITIONED QUITE LARGELY UPON THE GROWING USE OF MOTOR VEHICLES. IT IS IMPORTANT TO THE NATION THAT THIS HIGHWAY DEVELOPMENT BE SO DIRECTED THAT IT BRING GOOD ROADS AS NEAR AS POSSIBLE TO EVERY FARMER AND AT THE SAME TIME COORDINATE EFFECTIVELY WITH OTHER TRANSPORTATION FACILITIES. THE PROGRAM OF ROAD BUILDING SHOULD BE IN KEEPING WITH THE NEEDS AND RESOURCES OF THE VARIOUS REGIONS OF THE COUNTRY. IT IS A MATTER OF NATIONAL CONCERN, HOWEVER, AND ONE UPON WHICH THERE SHOULD CLEARLY BE COOPERATION BETWEEN THE FEDERAL AND STATE GOVERNMENTS."

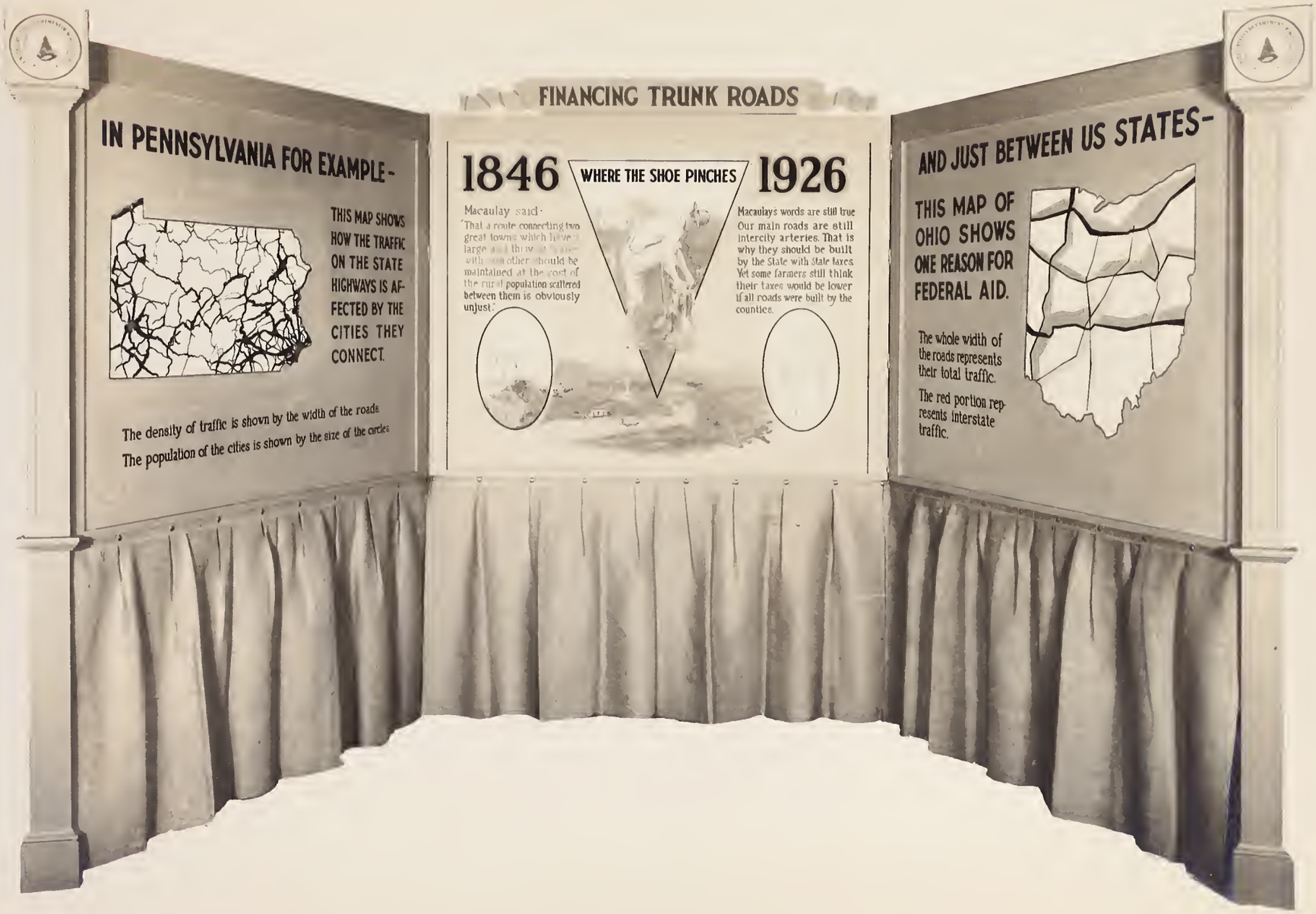
FINANCING TRUNK ROADS
IN PENNSYLVANIA FOR EXAMPLE-
THIS MAP SHOWS HOW THE TRAFFIC ON THE STATE HIGHWAYS IS AFFECTED BY THE CITIES THEY CONNECT.
The density of traffic is shown by the width of the roads
The population of the cities is shown by the size of the circles
1846
WHERE THE SHOE PINCHES
1926
Macaulay said:
"That a route connecting two great towns which have grown large and thriving at a time when no other should be maintained at the cost of the rural population scattered between them is obviously unjust."
Macaulay's words are still true. Our main roads are still intercity arteries. That is why they should be built by the State with State taxes. Yet some farmers still think their taxes would be lower if all roads were built by the counties.
AND JUST BETWEEN US STATES-
THIS MAP OF OHIO SHOWS ONE REASON FOR FEDERAL AID.
The whole width of the roads represents their total traffic.
The red portion represents interstate traffic.

HIGHWAY FINANCE - FEDERAL, STATE AND LOCAL

EXTRACTS FROM THE ADDRESS OF THE CHIEF OF THE BUREAU TO THE CONVENTION OF THE AMERICAN ROAD BUILDERS' ASSOCIATION HELD AT CHICAGO, ILLINOIS, JANUARY 11-15, 1926.

"THE MAJOR RESPONSIBILITIES OF THE PUBLIC BUSINESS OF THE NATION FALL MOST HEAVILY UPON THE LOCAL, RURAL AND URBAN GOVERNMENTS, NEXT UPON THE FEDERAL GOVERNMENT AND LEAST UPON THE STATE GOVERNMENTS. THE RATIO FIXED BY 1923 EXPENDITURES IS ABOUT 5.1 LOCAL, RURAL AND URBAN; 3.5 FEDERAL, AND 1.5 STATE." * * * * * *

"OF THE FUNDS AVAILABLE FOR EXPENDITURE UNDER THE SUPERVISION OF THE STATE HIGHWAY DEPARTMENTS IN 1924, 15.9 PER CENT WAS TRANSFERRED FROM COUNTIES, 16.5 PER CENT CAME FROM FEDERAL AID, 40 PER CENT FROM MOTOR VEHICLE FEES AND GAS TAX. THAT IS, 72.4 PER CENT OF THE TOTAL STATE HIGHWAY PROGRAM ESTIMATED AT $555,000,000 WAS FINANCED OTHER THAN BY USING THE CREDIT OF THE STATES OR THE GENERAL TAXING POWER OF THE STATES." * * * * * *

"THE FINANCING OF THE STATE HIGHWAY PROGRAM THROUGH CONTRIBUTIONS FROM THE COUNTIES IS WRONG IN PRINCIPLE AND WILL COST THE PUBLIC MORE IN THE END."* * *

"A GREATER PERCENTAGE OF STATE HIGHWAY FUNDS SHOULD BE EXPENDED FOR MORE DURABLE CONSTRUCTION, AND THE STATE HIGHWAY DEPARTMENTS SHOULD BE FINANCED WITHOUT RECOURSE TO COUNTY CONTRIBUTIONS.

"THE STATES MUST EXTEND THE SUPERVISION OF THEIR STATE HIGHWAY DEPARTMENTS OVER A LARGER MILEAGE OF LOCAL ROADS TO INSURE THEIR MAINTENANCE, THUS PRESERVING THE INVESTMENT. UNLESS THIS IS DONE WE ARE HEADED TOWARD LARGER LOCAL EXPENDITURES FOR HIGHWAY PURPOSES OR A DEPRECIATION OF ROADS ALREADY BUILT."* * * *

"THE TOTAL RURAL HIGHWAY MILEAGE OF THE UNITED STATES AT THE END OF 1924 AMOUNTED TO 3,002,916 MILES. THE RESPONSIBILITY FOR THE IMPROVEMENT AND MAINTENANCE OF THESE HIGHWAYS IS DIVIDED BETWEEN THE HIGHWAY DEPARTMENTS OF THE SEVERAL STATES ON THE ONE HAND AND THE COUNTIES AND TOWNSHIPS ON THE OTHER. THESE TWO TYPES OF CONTROL MAY BE CALLED STATE CONTROL AND LOCAL CONTROL.

"Of this total highway mileage 259,721 miles, or 8.6 per cent, were under the supervision and control of the State highway departments; the local control extended over 2,743,195 miles, or 91.4 per cent of the country's total highway mileage. The significant fact is that such a small part of the total highway mileage is found to be under direct or indirect control of State highway departments. The counties and townships and local road districts are still responsible for the construction and maintenance of by far the larger portion of all the highways. The relationship of the importance of the highways under these two types of control so far as traffic conditions are concerned is a wholly different matter."* * *

"Secretary Mellon in his report, page 21, says: 'We still make, as a result of the war, tremendous expenditures for debt retirements, interest on the debt, care of disabled veterans, etc., but these are unavoidable and will be necessary for many years to come. It is the inevitable price which we continue to pay for the war. In this connection it is of interest to point out the proportion of Government expenditures which are due to war. While it is not possible to segregate entirely all expenditures which might fall in this category, if we add to the disbursements for public debt retirements, interest on the debt, War, Navy, Veterans' Bureau, and pensions, other extraordinary expenditures, such as adjusted compensation and the increased outlays by the Treasury, the expenditures which are directly or indirectly attributable to war and the national defense compose over 80 per cent of total Federal expenditures. The amounts spent by this Government in aid of agriculture and business, for science, education, better roads, and other constructive efforts are insignificant when compared with outlays due to war and national defense. This will be the inevitable situation as long as war is the method of settling international disputes. These facts should be faced squarely by those who clamor for reduced Government expenditures and at the same time oppose the world's efforts to devise rational methods for dealing with international questions.'

"Of the total Federal expenditures, $3,530,000,000 the combined Federal-aid and forest highway payments were $105,000,000, or approximately 3 per cent of the total. This is the peak and represents neither past nor future average. Probably at the present rate, the average over several years will be about 2.5 per cent or less.

"By doing away with the entire Federal road program the taxpayer without dependents who pays an income tax of $37.50 on $5,000 would save about 88 cents.

"Governmental Expenditures 1923

Federal	$ 3,648,000,000	(actual)	$33.20 per capita
State	1,310,000,000	(actual)	11.82 " "
Local	5,142,000,000	(estimated)	46.41
Total	$10,100,000,000		$91.40

"Estimated Total Highway and Street Expenditure Compared with Total Expenditures All Purposes

	Expenditures for Highways	Total Expenditures All Purposes	Ratio of Highway Expenditures to Total Expenditures
Federal Government	$ 90,000,000	$ 3,648,000,000	2.5 per cent
State & Local Governments	1,210,000,000	6,452,000,000	18.7 " "
Total	$1,300,000,000	$10,100,000,000	Average 12.9 per cent"

MILEAGE OF FEDERAL-AID ROADS INITIALLY IMPROVED WITH STATE AND FEDERAL FUNDS DURING THE CALENDAR YEAR 1925 AND TOTALS TO DECEMBER 31, 1925.

Geographic Divisions and States	Total improved to December 31, 1924.	Improved during calendar year 1925.	Total improved to December 31, 1925.
	Miles	Miles	Miles
Grand Total	41,667.8	10,348.0	52,015.8
New England	1,071.3	191.7	1,263.0
Maine	278.6	17.8	296.4
New Hampshire	211.7	31.3	243.0
Vermont	87.0	46.0	133.0
Massachusetts	319.9	62.2	382.1
Rhode Island	62.7	24.0	86.7
Connecticut	111.4	10.4	121.8
Middle Atlantic	2,008.3	543.3	2,551.6
New York	834.4	250.7	1,085.1
New Jersey	211.8	65.8	277.6
Pennsylvania	962.1	226.8	1,188.9
East North Central	4,988.4	956.9	5,945.3
Ohio	1,149.7	183.7	1,333.4
Indiana	391.4	237.7	629.1
Illinois	1,247.4	171.1	1,418.5
Michigan	753.5	222.2	975.7
Wisconsin	1,446.4	142.2	1,588.6
West North Central	11,775.9	2,565.2	14,341.1
Minnesota	2,713.3	405.0	3,118.3
Iowa	1,892.1	183.0	2,075.1
Missouri	1,125.0	479.4	1,604.4
North Dakota	1,928.0	304.1	2,232.1
South Dakota	1,493.4	646.2	2,139.6
Nebraska	1,765.4	233.0	1,998.4
Kansas	858.7	314.5	1,173.2

MILEAGE OF FEDERAL-AID ROADS INITIALLY IMPROVED WITH STATE AND FEDERAL FUNDS DURING THE CALENDAR YEAR 1925 AND TOTALS TO DECEMBER 31, 1925. (CONTINUED)

Geographic Divisions and States	Total improved to December 31, 1924.	Improved during Calendar year 1925.	Total improved to December 31, 1925.
	Miles	Miles	Miles
South Atlantic	5,342.5	1,120.5	6,463.0
Delaware	86.3	33.1	119.4
Maryland	293.5	82.6	376.1
Virginia	741.5	260.4	1,001.9
West Virginia	321.8	41.6	363.4
North Carolina	1,078.5	166.7	1,245.2
South Carolina	1,195.8	145.4	1,341.2
Georgia	1,430.5	372.5	1,803.0
Florida	194.6	18.2	212.8
East South Central	2,581.0	1,179.0	3,760.0
Kentucky	565.0	167.2	732.2
Tennessee	450.9	275.2	726.1
Alabama	811.0	537.3	1,348.3
Mississippi	754.1	199.3	953.4
West South Central	6,034.3	2,009.1	8,043.4
Arkansas	1,026.8	227.3	1,254.1
Louisiana	824.0	218.4	1,042.4
Oklahoma	630.5	385.4	1,015.9
Texas	3,553.0	1,178.0	4,731.0
Mountain	5,696.5	1,318.9	7,015.4
Montana	902.3	120.8	1,023.1
Idaho	576.6	159.0	735.6
Wyoming	956.6	178.4	1,135.0
Colorado	658.2	134.0	792.2
New Mexico	1,184.9	242.1	1,427.0
Arizona	614.9	120.6	735.5
Utah	426.9	156.5	583.4
Nevada	376.1	207.5	583.6
Pacific	2,169.6	463.4	2,633.0
Washington	536.6	128.6	665.2
Oregon	814.2	104.2	918.4
California	818.8	230.6	1,049.4


HIGHWAY ACCIDENTS
CAUSES OF ACCIDENTS IN THE PACIFIC NORTHWEST IN 1924
Faulty operation by driver
64%
Faulty Highway Conditions
13%
Faulty Equipment
11%
12%
Number of accidents at time of 1924 on rural highways of Montana, Oregon and Washington
Faulty operation by driver 1002
Faulty highway conditions 214
Faults of others than drivers 151
Faulty equipment 181
Total number 1668
1
BE CAREFUL
DRIVER IN EVERY 2
IS LIABLE TO AN ACCIDENT IN A LIFETIME
YOU MAY BE THE ONE
THE HIGHWAY ACCIDENT RISK MUST BE REDUCED
The frequency of accidents increases as the traffic on our highways becomes heavier. The risk can be reduced by building safer roads, by erecting uniform caution signs and by rigid enforcement of traffic regulations
But after all ~
The individual driver must be made to recognize his own responsibility.


HIGHWAY ACCIDENTS
CAUSES OF ACCIDENTS IN THE PACIFIC NORTHWEST IN 1924
Faulty operation by driver
64%
12%
13%
Faulty Equipment
11%
1
BE CAREFUL
DRIVER IN EVERY 2
IS LIABLE TO AN ACCIDENT IN A LIFETIME
YOU MAY BE THE ONE
THE HIGHWAY ACCIDENT RISK MUST BE REDUCED
The frequency of accidents increases as the traffic on our highways becomes heavier. The risk can be reduced by building safer roads, by erecting uniform caution signs and by rigid enforcement of traffic regulations
But after all —
The individual driver must be made to recognize his own responsibility.

PROGRESS OF FEDERAL HIGHWAY LEGISLATION

THE FOLLOWING BILLS HAVE BEEN INTRODUCED IN THE HOUSE OF REPRESENTATIVES SINCE THE PRESENT CONGRESS (69TH - FIRST SESSION) CONVENED ON DECEMBER 7, 1925. THEY HAVE ALL BEEN REFERRED TO THE APPROPRIATE COMMITTEES BUT AS YET NONE BUT THE BILL MAKING APPROPRIATIONS FOR THE DEPARTMENT OF AGRICULTURE HAS BEEN REPORTED OUT. THE LAST CONGRESS AUTHORIZED BUT DID NOT APPROPRIATE $75,000,000 FOR FEDERAL AID AND $7,500,000 FOR FOREST ROADS FOR EACH OF THE FISCAL YEARS ENDING JUNE 30, 1926, AND JUNE 30, 1927.

H.R. 3823 - INTRODUCED IN HOUSE DECEMBER 7, 1925, BY C. C. DOWELL OF IOWA.

AUTHORIZES APPROPRIATION OF $80,000,000 FOR FISCAL YEAR 1928; AND $80,000,000 FOR FISCAL YEAR 1929.
AUTHORIZES FOR FOREST ROADS THE FOLLOWING SUMS: FOR FISCAL YEARS 1928 AND 1929, $8,000,000 EACH.

H.R. 4442 - INTRODUCED IN HOUSE DECEMBER 9, 1925, BY D. B. COLTON OF UTAH.

AMENDS SEC. 11 OF FEDERAL HIGHWAY ACT BY ADDING AT THE END OF THE SECOND PARAGRAPH, A PROVISION THAT THE WHOLE COST OF FEDERAL-AID ROADS MAY BE PAID BY THE GOVERNMENT IN PUBLIC LAND STATES UNDER CERTAIN CONDITIONS.
AMENDS POST OFFICE APPROPRIATION ACT OF JUNE 30, 1923, TO MAKE LIMITS OF PAYMENT CONFORM TO THE ABOVE.
ALSO PROVIDES THAT SECRETARY MAY MAKE PAYMENTS IN EXCESS OF $15,000 PER MILE:

1. IF GRADING AND DRAINAGE COST MORE THAN $10,000 A MILE.
2. IF DENSITY OF POPULATION AND TRAFFIC REQUIRE A SURFACE MORE THAN 18 FEET WIDE.

ALSO PROVIDES THAT NO STATE ENTITLED TO PARTICIPATE SHALL RECEIVE LESS THAN $20,000 OF FOREST ROAD APPROPRIATIONS.

H.R. 137 - Introduced in House December 7, 1925, by J. M. Evans of Montana.

Amends Sec. 11 of Federal Highway Act by providing that in the public land States where the population does not exceed 10 per square mile, the entire cost of construction may be paid with Federal aid.

Amends Paragraph 4 of Section 4 of the Post Office Appropriation Act for 1923 which amends Section 5 of the Post Office Appropriation Act of February 28, 1919 (limited participation to $20,000 per mile) so as to provide that the limit of Federal participation shall be 50 per cent of cost for appropriations for all years after the fiscal year 1923 with the same provision for increased participation in the public land States as heretofore.

H.R. 51 - Introduced in House December 7, 1925, by E. E. Denison of Illinois.

General Bridge Act - Bridges over navigable streams subject to approval of Secretary of War and if on Federal-aid roads or connections by Secretary of Agriculture.

Governmental units may construct bridges and charge tolls for 25 years to retire cost. They then become free.

Private toll bridges may be erected. After 20 years they are subject to be taken over by condemnation proceedings without allowance for going value, etc. Act does not apply to existing bridges.

H.R. 5980 - Introduced in House December 18, 1925, by B. B. Hare of South Carolina.

All excise taxes as provided in H.R. 1, 69th Congress, 1st Session, Title 6, sec. 600, subsection (1) to be put in a Federal highway fund, to be distributed as Congress may hereafter provide.

H.R. 5988 - Introduced in House December 18, 1925, by J. H. Robsion of Kentucky.

Authorizes $100,000,000 for each of the fiscal years 1927, 1928, and 1929 for Federal aid.
Authorizes $10,000,000 for each of the fiscal years 1927, 1928, and 1929 for forest roads.
States lacking sufficient Federal aid to match State money may be reimbursed from apportionments for future years.

H.R. 7572 - Introduced in House December 13, 1925, by E. B. Almon of Alabama.

Authorizes appropriation of $125,000,000 for Federal aid for each of the fiscal years 1927, 1928 and 1929.
Authorizes appropriation for forest roads of $10,000,000 for each of fiscal years 1927, 1928 and 1929.

H.R. 8264 - Introduced in House January 23, 1926, by W. W. Magee of New York from the Committee on Appropriations.
Making appropriations for the Department of Agriculture for the fiscal year ending June 30, 1927, and for other purposes.
$5,000,000 is appropriated for forest roads for the fiscal year 1926, of the $7,500,000 authorized.
$75,000,000 is appropriated for Federal-aid roads. $28,300,000 of this is a portion of the 1926 authorization. The balance is the unappropriated remainder of the $75,000,000 authorized for the fiscal year 1925.

CORRECTION OF GASOLINE TAX RATES

The gasoline tax rate in Idaho was increased from 2 to 3 cents effective March 1, 1925, according to information recently received. This is a correction of the list printed in the December 1925, NEWS LETTER. With this change there are 19 States and the District of Columbia that have a 2 cent tax and 12 States in the 3 cent tax class.

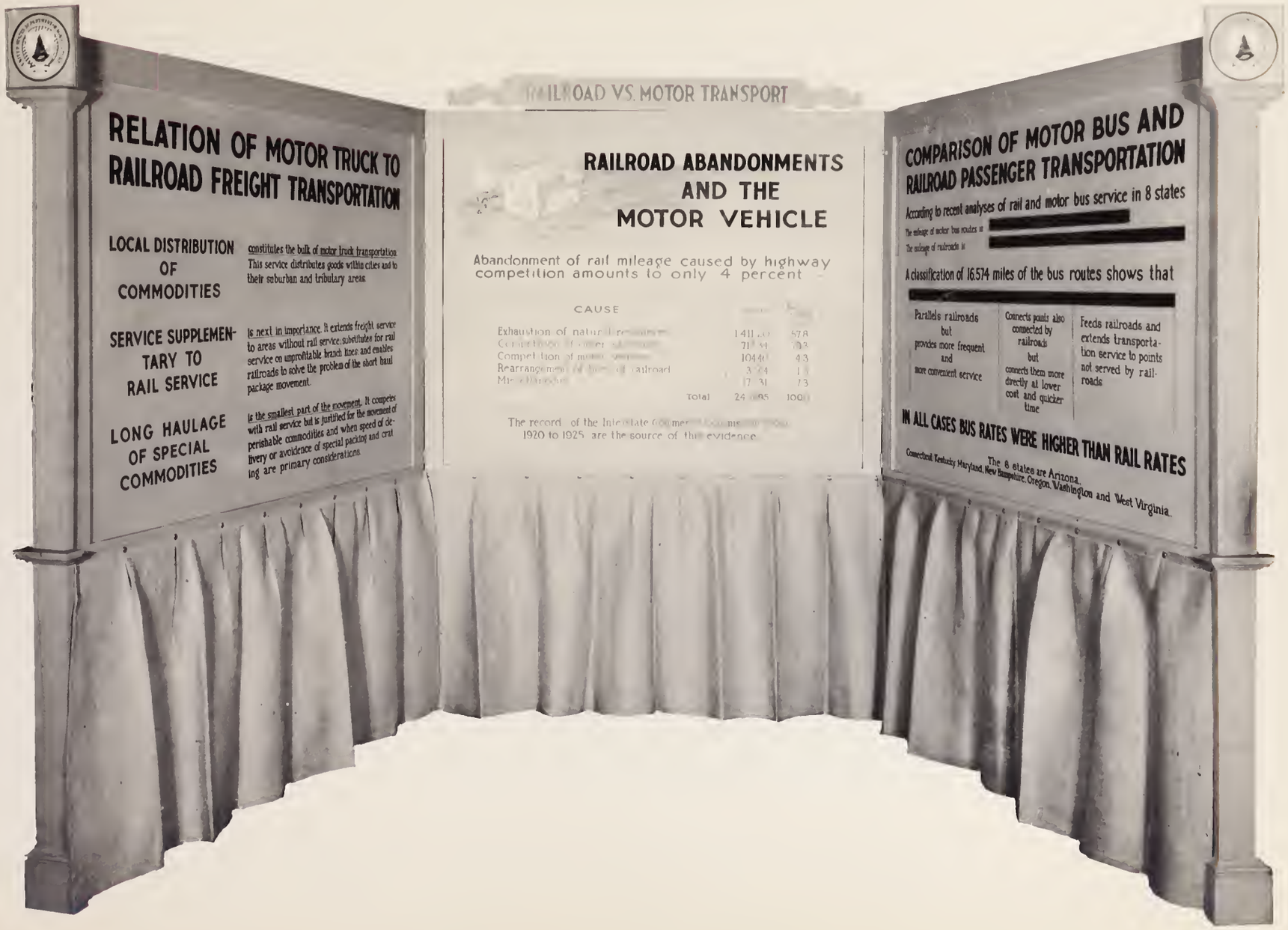
RAILROAD VS. MOTOR TRANSPORT
RELATION OF MOTOR TRUCK TO RAILROAD FREIGHT TRANSPORTATION
LOCAL DISTRIBUTION OF COMMODITIES
constitutes the bulk of motor truck transportation. This service distributes goods within cities and to their suburban and tributary areas.
SERVICE SUPPLEMENTARY TO RAIL SERVICE
is next in importance. It extends freight service to areas without rail service, substitutes for rail service on unprofitable branch lines and enables railroads to solve the problem of the short haul package movement.
LONG HAULAGE OF SPECIAL COMMODITIES
is the smallest part of the movement. It competes with rail service but is justified for the movement of perishable commodities and when speed of delivery or avoidence of special packing and crating are primary considerations.
RAILROAD ABANDONMENTS AND THE MOTOR VEHICLE
Abandonment of rail mileage caused by highway competition amounts to only 4 percent
CAUSE
Exhaustion of natural resources
Competition of other railroads
Competition of motor vehicles
Rearrangement of lines of railroad
Miscellaneous
Total
The record of the Interstate Commerce Commission from 1920 to 1925 are the source of this evidence.
COMPARISON OF MOTOR BUS AND RAILROAD PASSENGER TRANSPORTATION
According to recent analyses of rail and motor bus service in 8 states
The mileage of motor bus routes is
The mileage of railroads is
A classification of 16,574 miles of the bus routes shows that
Parallels railroads but provides more frequent and more convenient service
Connects points also connected by railroads but connects them more directly at lower cost and quicker time
Feeds railroads and extends transportation service to points not served by railroads
IN ALL CASES BUS RATES WERE HIGHER THAN RAIL RATES
The 8 states are Arizona, Connecticut, Kentucky, Maryland, New Hampshire, Oregon, Washington and West Virginia.

UNITED STATES DEPARTMENT OF AGRICULTURE
BUREAU OF PUBLIC ROADS

B.P.R.-F.A.-A-1
S. JANUARY 1, 1926.-A.

APPORTIONMENT OF FEDERAL AID TO STATES
FISCAL YEARS 1917 - 1927

STATE	TOTAL APPORTIONMENT 1917-1925	APPORTIONMENT FISCAL YEAR 1926	REAPPORTIONMENT OF $655,546.34 FROM MONTANA'S PART OF THE 1923 APPORTIONMENT	APPORTIONMENT FISCAL YEAR 1927	TOTAL APPORTIONMENT 1917- 1927	STATE
	$	$	$	$	$	
ALABAMA	11,252,963.00	1,541,870.00	13,823.00	1,540,799.00	14,349,455.00	ALABAMA
ARIZONA	7,495,701.00	1,056,171.00	9,469.00	1,055,908.00	9,617,249.00	ARIZONA
ARKANSAS	9,062,400.00	1,264,164.00	11,333.00	1,267,907.00	11,605,804.00	ARKANSAS
CALIFORNIA	17,093,306.00	2,472,636.00	22,167.00	2,484,706.00	22,072,815.00	CALIFORNIA
COLORADO	9,559,881.00	1,373,237.00	12,310.00	1,380,384.00	12,325,812.00	COLORADO
CONNECTICUT	3,381,195.00	474,801.00	4,257.00	473,428.00	4,333,681.00	CONNECTICUT
DELAWARE	1,739,530.00	365,625.00	3,278.00	365,625.00	2,474,058.00	DELAWARE
FLORIDA	6,286,887.00	892,878.00	8,004.00	897,185.00	8,084,954.00	FLORIDA
GEORGIA	14,449,897.00	1,983,089.00	17,778.00	1,981,189.00	18,431,953.00	GEORGIA
IDAHO	6,677,712.00	936,927.00	8,399.00	936,589.00	8,559,627.00	IDAHO
ILLINOIS	23,436,492.00	3,191,479.00	28,611.00	3,175,616.00	29,832,198.00	ILLINOIS
INDIANA	14,312,392.00	1,938,693.00	17,380.00	1,935,890.00	18,204,355.00	INDIANA
IOWA	15,336,137.00	2,070,396.00	18,561.00	2,060,469.00	19,485,563.00	IOWA
KANSAS	15,299,289.00	2,074,360.00	18,596.00	2,072,166.00	19,464,411.00	KANSAS
KENTUCKY	10,371,739.00	1,411,607.00	12,654.00	1,416,809.00	13,212,809.00	KENTUCKY
LOUISIANA	7,265,442.00	997,262.00	8,940.00	1,000,764.00	9,272,408.00	LOUISIANA
MAINE	5,089,972.00	685,140.00	6,142.00	683,574.00	6,464,828.00	MAINE
MARYLAND	4,648,950.00	635,783.00	5,700.00	634,624.00	5,925,057.00	MARYLAND
MASSACHUSETTS	7,919,780.00	1,090,118.00	9,773.00	1,089,055.00	10,108,726.00	MASSACHUSETTS
MICHIGAN	15,879,772.00	2,226,227.00	19,948.00	2,217,418.00	20,342,365.00	MICHIGAN
MINNESOTA	15,318,419.00	2,124,151.00	19,042.00	2,130,168.00	19,591,780.00	MINNESOTA
MISSISSIPPI	9,531,273.00	1,291,960.00	11,582.00	1,293,203.00	12,128,018.00	MISSISSIPPI
MISSOURI	17,940,188.00	2,417,727.00	21,674.00	2,406,847.00	22,786,436.00	MISSOURI
MONTANA	*10,310,870.66	1,548,473.00	13,881.34	1,551,660.00	13,424,885.00	MONTANA
NEBRASKA	11,450,946.00	1,581,969.00	14,182.00	1,588,138.00	14,635,235.00	NEBRASKA
NEVADA	6,890,321.00	948,076.00	8,500.00	948,318.00	8,795,215.00	NEVADA
NEW HAMPSHIRE	2,434,964.00	365,625.00	3,278.00	365,625.00	3,169,492.00	NEW HAMPSHIRE
NEW JERSEY	6,589,247.00	935,082.00	8,383.00	934,708.00	8,467,420.00	NEW JERSEY
NEW MEXICO	8,589,332.00	1,185,166.00	10,624.00	1,187,264.00	10,972,386.00	NEW MEXICO
NEW YORK	26,708,148.00	3,657,096.00	32,785.00	3,647,166.00	34,045,195.00	NEW YORK
NORTH CAROLINA	12,294,251.00	1,699,168.00	15,233.00	1,708,554.00	15,717,206.00	NORTH CAROLINA
NORTH DAKOTA	8,363,656.00	1,160,699.00	10,584.00	1,193,720.00	10,748,659.00	NORTH DAKOTA
OHIO	20,140,164.00	2,789,588.00	25,007.00	2,777,037.00	25,731,796.00	OHIO
OKLAHOMA	12,536,703.00	1,755,105.00	15,734.00	1,752,245.00	16,059,787.00	OKLAHOMA
OREGON	8,506,159.00	1,179,668.00	10,575.00	1,182,945.00	10,879,347.00	OREGON
PENNSYLVANIA	24,601,616.00	3,360,123.00	30,122.00	3,346,920.00	31,338,781.00	PENNSYLVANIA
RHODE ISLAND	1,933,041.00	365,625.00	3,278.00	365,625.00	2,667,569.00	RHODE ISLAND
SOUTH CAROLINA	7,687,546.00	1,052,549.00	9,436.00	1,051,993.00	9,801,524.00	SOUTH CAROLINA
SOUTH DAKOTA	8,718,680.00	1,215,020.00	10,892.00	1,222,198.00	11,166,790.00	SOUTH DAKOTA
TENNESSEE	12,024,637.00	1,622,985.00	14,550.00	1,618,419.00	15,280,591.00	TENNESSEE
TEXAS	31,724,213.00	4,415,715.00	39,586.00	4,426,917.00	40,606,431.00	TEXAS
UTAH	6,116,473.00	846,467.00	7,588.00	848,251.00	7,818,779.00	UTAH
VERMONT	2,533,979.00	365,625.00	3,278.00	365,625.00	3,268,507.00	VERMONT
VIRGINIA	10,592,953.00	1,449,713.00	12,996.00	1,445,852.00	13,501,514.00	VIRGINIA
WASHINGTON	7,886,678.00	1,118,987.00	10,031.00	1,130,080.00	10,145,776.00	WASHINGTON
WEST VIRGINIA	5,754,132.00	797,295.00	7,148.00	793,936.00	7,352,511.00	WEST VIRGINIA
WISCONSIN	13,678,451.00	1,873,308.00	16,734.00	1,870,262.00	17,438,815.00	WISCONSIN
WYOMING	6,687,351.00	934,947.00	8,382.00	935,594.00	8,566,274.00	WYOMING
HAWAII	365,625.00	365,625.00	3,278.00	365,625.00	1,100,153.00	HAWAII
TOTALS	$ *524,469,453.66	$ 73,125,000.00	$ 655,546.34	$ 73,125,000.00	$ 671,375,000.00	TOTALS

* LESS $655,546.34 FROM THE 1923 APPORTIONMENT WHICH WAS REAPPORTIONED AUGUST 29, 1925.

UNITED STATES HIGHWAYS APPROVED BY FORTY-ONE STATES

THE DIFFICULTIES ENCOUNTERED IN NUMBERING THE ROUTES AND IN THE PROPOSED MARKING SYSTEM FOR THE UNITED STATES HIGHWAYS WERE DISCUSSED AND THRESHED OUT BY THE EXECUTIVE COMMITTEE OF THE AMERICAN ASSOCIATION OF STATE HIGHWAY OFFICIALS ON JANUARY 14. ADJUSTMENTS AND FINAL DECISIONS WERE REACHED IN ALL BUT TWO CASES - KANSAS AND KENTUCKY. THE LATTER WERE TAKEN UNDER ADVISEMENT. FOUR STATES - PENNSYLVANIA, NEW YORK, NEW JERSEY AND MARYLAND - DID NOT PRESENT THEIR CASES EXCEPT IN A GENERAL WAY. A FURTHER CONFERENCE WILL BE HELD WITH THIS GROUP THE LATTER PART OF JANUARY, AT WHICH TIME ADJUSTMENTS SHOULD BE COMPLETED. THE ADJUSTMENTS IN KANSAS AND KENTUCKY SHOULD BE CONCLUDED BY FEBRUARY FIRST. ALL THE OTHER STATES MAY BE ASSUMED TO HAVE APPROVED THE PROGRAM WITH OR WITHOUT ADJUSTMENTS WITH THE EXCEPTION OF ARIZONA FROM WHICH NO OFFICIAL WORD WAS HEARD. THIS MEANS THAT PRACTICALLY 41 STATES HAVE ACCEPTED THE PROGRAM.

THE COMPLETELY REVISED MAP SHOWING THE LOCATION OF THE NUMBERED ROUTES SHOULD BE READY FOR DISTRIBUTION BY MARCH FIRST. DETAILED DIMENSION WORKING DRAWINGS ARE BEING PREPARED FOR THE UNITED STATES HIGHWAYS SHIELDS, THE DIRECTION AND INFORMATION, AND THE DANGER AND CAUTION SIGNS. THESE DRAWINGS PROVIDE FOR STANDARD SYSTEMS OF LETTERING: SAMPLES OF THE PROPER COLOR OF PAINT, ESPECIALLY THE YELLOW, WILL BE DISTRIBUTED IN ONE HALF PINT TINS OR BOTTLES TO THE 48 STATES WITHIN A FEW WEEKS. THIS COLOR HAS BEEN MATCHED WITH THE EXACT COLOR DETERMINED BY THE BUREAU OF STANDARDS ON THE BASIS OF THE MEASURED DOMINANT WAVE LENGTH OF WHITE LIGHT REFLECTED FROM THE PIGMENT. IT WILL NOT BE POSSIBLE TO MATCH SAMPLES IN GLASS BOTTLES BECAUSE THE GLASS ALWAYS LENDS A GREENISH TINGE TO THE CONTAINED PAINT. IT WILL BE NECESSARY TO POUR OUT A SMALL AMOUNT FROM THE CONTAINER AND BRUSH IT OVER A WHITE SURFACE BEFORE ANY COMPARISON IS MADE. THE COLOR ON THE SIGNS WILL FADE TO SOME EXTENT WHEN EXPOSED TO THE WEATHER. THIS CAN BE PREVENTED FROM CAUSING ANY MISUNDERSTANDING BY PROPER MAINTENANCE WHICH INCLUDES REPAINTING OF THE SIGNS WHEN NECESSARY.

IT IS HOPED THAT THE MAJOR PORTION OF THE ROUTE NUMBER MARKERS (UNITED STATES HIGHWAYS SHIELDS) WILL BE ERECTED OVER THE ENTIRE COUNTRY BY JULY 1, 1926. THE MATERIAL TO BE USED IN THE SIGNS - WHETHER STEEL, CONCRETE OR WOOD - IS OPTIONAL WITH THE STATES. NO STANDARD MATERIAL HAS BEEN ADOPTED. IT IS HOPED THAT A PLAN MAY BE DEVISED WHEREBY ON FEDERAL-AID ROADS THE COST OF THE SIGNS MAY BE BORN BY THE BUREAU AND THE STATES COOPERATING AS ON ANY OTHER FEDERAL-AID PROJECT.

BRICK TEST ROAD NOW UNDER TRAFFIC

An investigation of the relative merits of different thicknesses of paving brick is now being conducted by the Bureau of Public Roads at Arlington, Virginia.

Ten test sections, each about 50 feet in length, have been laid around a circular track and are being subjected to a concentrated motor truck traffic. Vertical-fiber, lugless paving brick of 2, 2-1/2, 3, 3-1/2, and 4-inch thicknesses, have been laid on plain sand and cement-sand bedding courses, 3/4-inch in thickness, and the joints filled with asphalt. Under this wearing course is a reinforced concrete base laid on a gravel sub-base.

The truck traffic is limited to a path 30 inches in width, in order to accelerate the test. So far 10,000 passages of a 3-ton truck carrying a capacity load, and 3,000 trips of a 5-ton truck with capacity load, have been made over the restricted traffic zone. A careful study of the behavior of the various sections is being made.

This test will be accompanied by a field study of brick pavements which have been down for some years, and by a complete laboratory test of the various depths of brick being used in this test road.

CABLE GUARD RAIL BRACKETS SUGGESTED

Submitted by the Division of Construction

The growing experience and special tests conducted by the Pennsylvania Highway Department and other agencies seem to indicate that the cable guard rail consisting of two strands of 3/4 or 7/8-inch cable is the only form of fence which is capable of preventing vehicles from leaving the road. The old-style wooden guard rail is believed by some to be positively dangerous. In a number of instances the rails have passed through the radiator or windshield of the car, killing or injuring the occupants.

Wooden posts are believed to be more effective and better than concrete posts for the cable type of fence, but with either type of post the method of attaching the cable to the post is a detail that has not always been satisfactorily worked out. In the earlier designs the cable was commonly passed through holes bored in the posts. Lately some of the States have been using a special bracket.

District Engineer Purcell furnishes two designs of bracket, the following drawings of which will doubtless interest engineers of the Bureau. One of the designs suggests an eye-bolt, the other a hook-bolt. Mr. Purcell is of the opinion that the eye-bolt design is much neater but remarks that the bolt must, of course, be threaded to the cable after the manner of a needle and thread. The hook-bolt design is not subject to this criticism.

STANDARD FOREST ROAD BRIDGE PLANS

Reported by the Bridge Section of the Division of Design

The standard plans for 80, 100, 120, 150 and 200-foot steel bridges, now being prepared in the Washington Office for forest roads, will be completed by February 1, 1925. These plans cover all the work on the major structures proposed for this year. It is planned to extend the standards year by year as the forest road program makes necessary other span lengths and types of material, such as concrete and wood.

COOK COUNTY HIGHWAY SYSTEM REPORT TO BE READY SOON

The report of the study of the Cook County, Illinois, highway system made by the United States Bureau of Public Roads and the Cook County Highway Department is now in the hands of the printer and will be ready for distribution by the middle of February.

The report contains the results of highway traffic studies conducted during the summer and fall of 1924 under the cooperative research agreement between the Federal Bureau and the Cook County Department.

These investigations were undertaken in order to obtain essential facts concerning traffic on the Cook County highways as a basis for planning the development of the highway system in the Chicago regional area to serve present and future traffic.

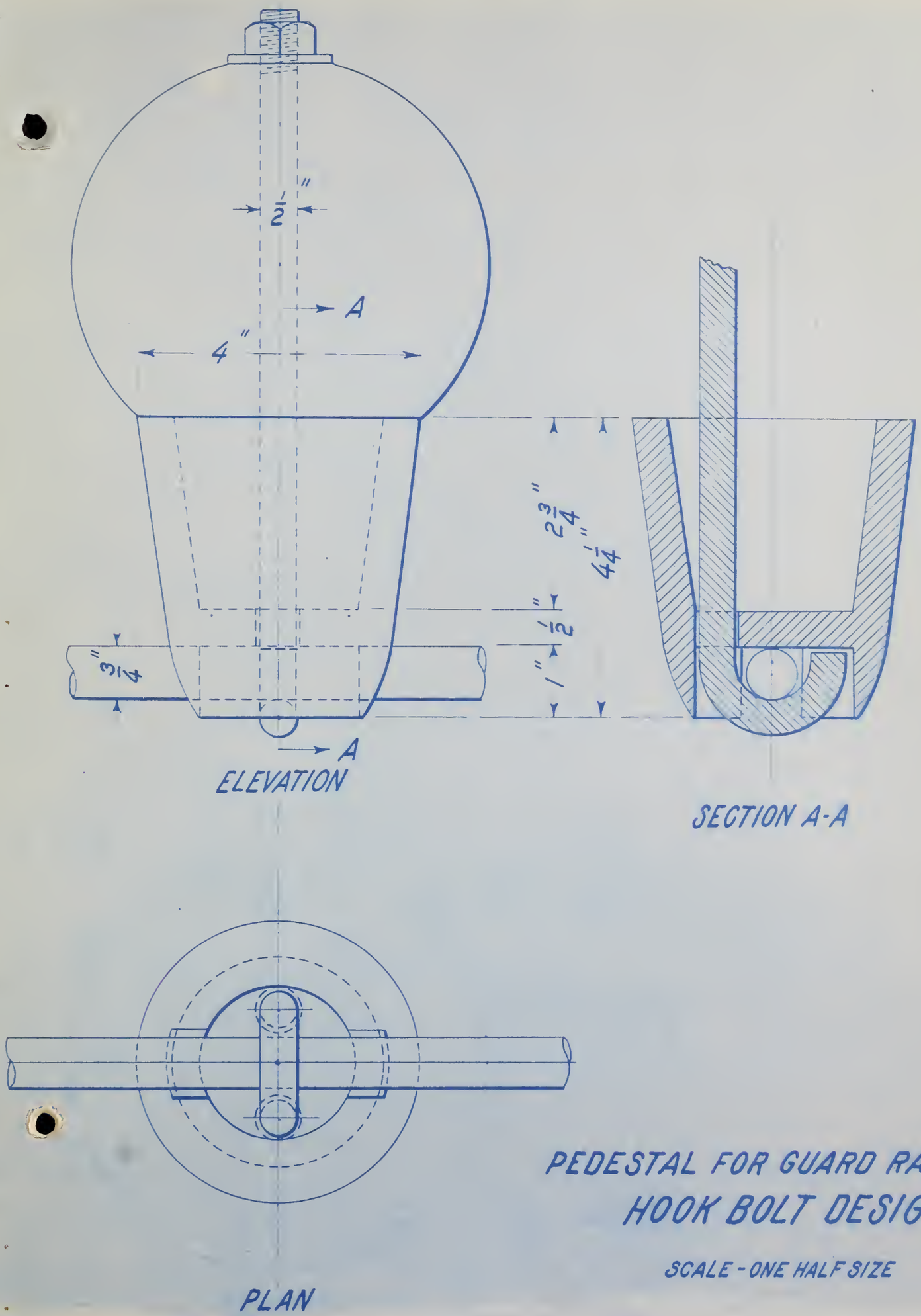

PEDESTAL FOR GUARD RAIL CABLE
HOOK BOLT DESIGN

SCALE - ONE HALF SIZE

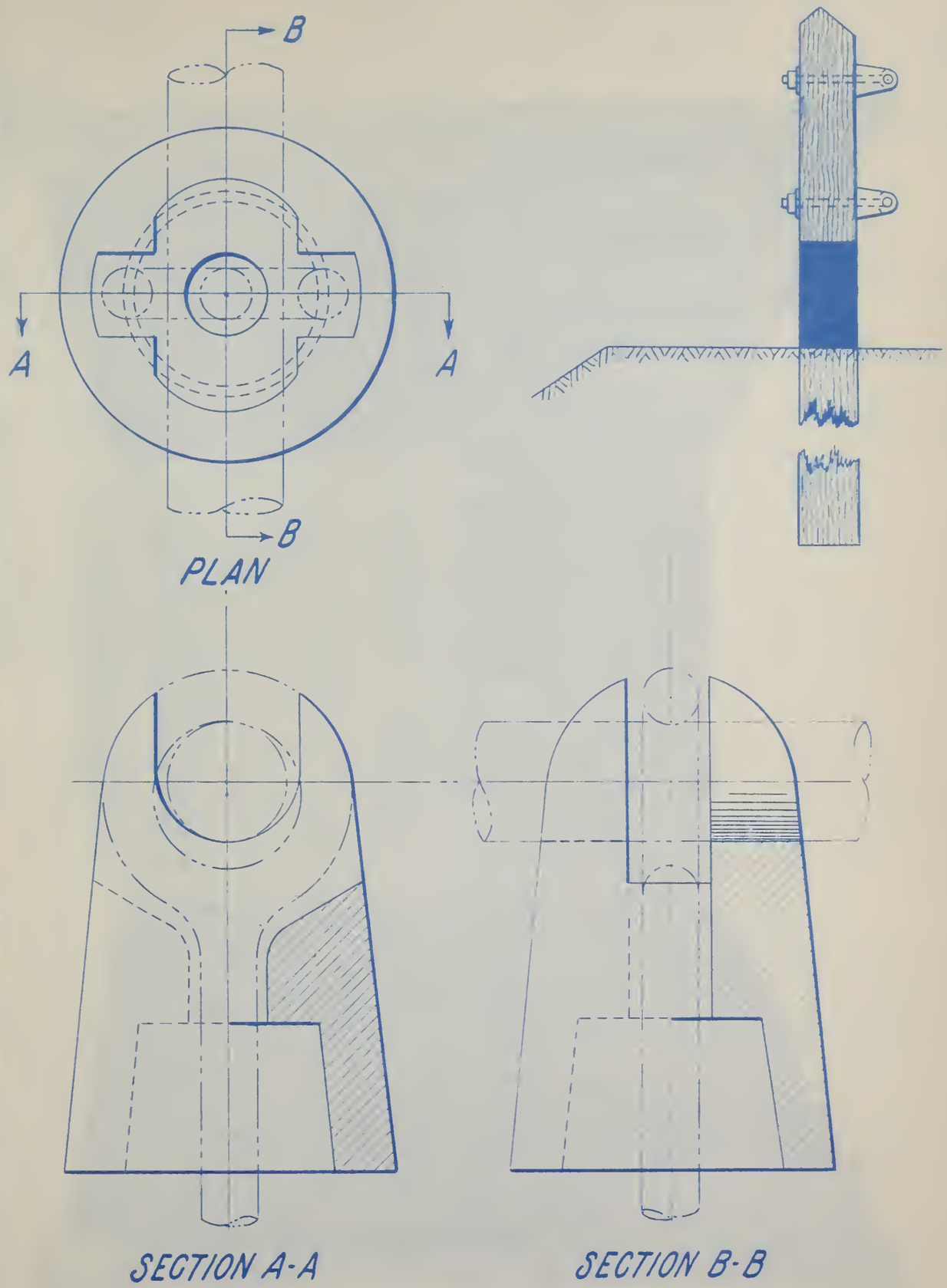

PEDESTAL FOR GUARD RAIL CABLE

EYE BOLT DESIGN

SCALE - THREE QUARTER SIZE

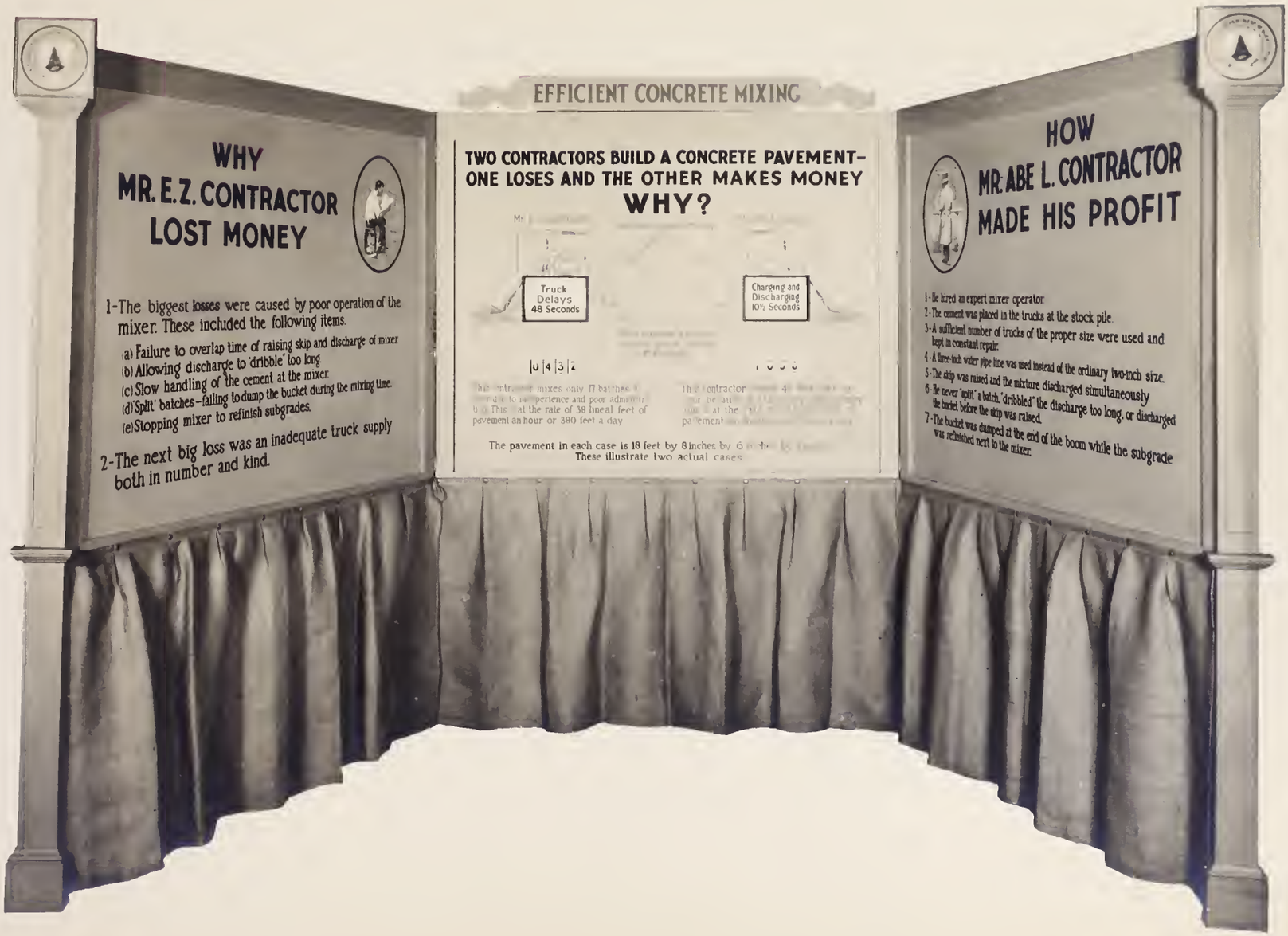
EFFICIENT CONCRETE MIXING
WHY
MR. E. Z. CONTRACTOR
LOST MONEY
1-The biggest losses were caused by poor operation of the mixer. These included the following items.
(a) Failure to overlap time of raising skip and discharge of mixer
(b) Allowing discharge to 'dribble' too long
(c) Slow handling of the cement at the mixer
(d) 'Split' batches—failing to dump the bucket during the mixing time.
(e) Stopping mixer to refinish subgrades.
2-The next big loss was an inadequate truck supply both in number and kind.
TWO CONTRACTORS BUILD A CONCRETE PAVEMENT—
ONE LOSES AND THE OTHER MAKES MONEY
WHY?
Truck Delays 48 Seconds
Charging and Discharging 10½ Seconds
This at the rate of 38 lineal feet of pavement an hour or 380 feet a day
The pavement in each case is 18 feet by 8 inches by 6
These illustrate two actual cases
HOW
MR. ABE L. CONTRACTOR
MADE HIS PROFIT
1-He hired an expert mixer operator.
2-The cement was placed in the trucks at the stock pile.
3-A sufficient number of trucks of the proper size were used and kept in constant repair.
4-A three-inch water pipe line was used instead of the ordinary two-inch size.
5-The skip was raised and the mixture discharged simultaneously.
6-He never 'split' a batch, 'dribbled' the discharge too long, or discharged the bucket before the skip was raised.
7-The bucket was dumped at the end of the boom while the subgrade was refinished next to the mixer.

AN ELABORATE MAINTENANCE UTILITY TRUCK

REPORT BY JOHN D. SLYE, ASSISTANT HIGHWAY ENGINEER,
THROUGH J. W. JOHNSON, DISTRICT ENGINEER.

DISTRICT NO. 7 OF THE COLORADO STATE HIGHWAY DEPARTMENT HAS EQUIPPED A TRUCK WITH CARRYING COMPARTMENTS FOR MATERIALS, TOOLS AND APPLIANCES WHICH APPEAR TO MAKE IT THE LAST WORD IN USEFULNESS AND WORTHY OF DESCRIPTION.

THE FOUNDATION OF THE UNIT IS A FAGEOL, 5-TON, HEAVY-DUTY TRUCK EQUIPPED WITH A 7-SPEED, COMPOUND TRANSMISSION, 5 SPEEDS AHEAD AND 2 REVERSE. THE MOTOR HAS 4 CYLINDERS AND A RATING OF 32.4 HORSE-POWER. THIS MOTOR SUPPLIES THE POWER FOR ALL THE EQUIPMENT, THE AUXILIARY POWER SHAFTS BEING OPERATED AT DIFFERENT SPEEDS THROUGH THE COMPOUND TRANSMISSION SPEEDS.

EQUIPMENT CARRIED AND POWER FURNISHED BY THE UNIT.

1. AIR COMPRESSOR WITH AIR TANK AND HOSE CONNECTIONS.
2. COMBINATION MATERIAL BINS, WITH A CAPACITY OF 1 CUBIC YARD OF SAND, 2 CUBIC YARDS OF GRAVEL AND 1,000 POUNDS OF CEMENT.
3. WATER TANK WITH A CAPACITY OF 150 GALLONS.
4. ROTARY CONCRETE MIXER.
5. CENTRIFUGAL PUMP FOR FILLING TANK FROM STREAMS OR WELLS.
6. POWER-DRIVEN NIGGER-HEAD WINCH
7. TAR AND ROAD-OIL HEATING TANK WITH GAS BURNERS; CAPACITY 150 GALLONS WITH SYPHON NOZZLE FOR SPRAYING HOT TAR OR OIL UNDER PRESSURE.
8. COMPLETE PAINT SPRAY OUTFIT.
9. LARGE JACK HAMMER WITH ASSORTED CHISELS, TAMPERS, ETC.
10. PNEUMATIC ROTARY POST-HOLE DIGGER.
11. EXTENSION SIDE ARM OR BOOM ON FROMT OF TRUCK FOR GRADING OR SMOOTHING SHOULDERS.
12. SMALL EQUIPMENT CONSISTING OF PLOW, DRAG, WHEELBARROW, ROPE, AND HAND TOOLS.

WITH THIS UNIT THE MILEAGE OF HIGHWAY THAT CAN BE PATROLLED BY ONE CREW IS GREATLY INCREASED, AND ANY REASONABLE JOB OF REPAIR OR MAINTENANCE WORK MAY BE COMPLETED IN A SHORT TIME. DOING MUCH OF THE WORK BY POWER-DRIVEN MACHINERY AND HAVING THE REQUIRED MATERIAL AT HAND ENABLES A MUCH SMALLER CREW TO KEEP UP THE NECESSARY MAINTENANCE WORK THAN IS USUALLY REQUIRED.

FOLLOWING ARE A FEW OF THE CLASSES OF WORK THAT CAN BE PERFORMED WITH THE MAINTENANCE UNIT ON THE JOB.

1. REPAIRING OF CRACKS OR BREAKS IN PAVEMENT.
2. ERECTING FENCES AND TRAFFIC SIGNS.
3. REPAIRING AND PAINTING STEEL OR WOODEN BRIDGES.
4. GRADING OR SHOULDERING, ROLLING AND DRAINING RIGHT OF WAY.

PHOTOGRAPHIC VIEWS OF THE MAINTENANCE TRUCK FOLLOW ON THE NEXT PAGE.

SATURDAY AFTERNOON MEETINGS TO BE HELD IN THE HEADQUARTERS OFFICE

A SERIES OF SATURDAY AFTERNOON MEETINGS WILL BE HELD IN THE WASHINGTON OFFICE AT WHICH TALKS WILL BE MADE BY MEMBERS OF THE STAFF. THESE MEETINGS HAVE BEEN ARRANGED TO PROVIDE THE ENGINEERING, SCIENTIFIC AND TECHNICAL WORKERS OF THE BUREAU WITH A MORE COMPREHENSIVE UNDERSTANDING OF OUR ACTIVITIES. THE FIRST MEETING WAS CALLED TOGETHER ON JANUARY 23, AT WHICH TIME, MR. BISHOP, CHIEF OF THE DIVISION OF CONSTRUCTION, DISCUSSED "METHODS OF EVALUATING CONCRETE PAVEMENT FROM CORE DRILL DATA."

TALKS WHICH HAVE BEEN ARRANGED FOR THE NEAR FUTURE INCLUDE: "UNITED STATES HIGHWAYS" BY MR. JAMES ON JANUARY 30; "NATIONAL PARK ROADS" BY DR. HEWES ON FEBRUARY 6; AND "CONCRETE PAVEMENT DESIGN" BY MR. TELLER ON FEBRUARY 20.

A MAINTENANCE TRUCK USED BY THE COLORADO STATE HIGHWAY DEPARTMENT CARRIES MATERIAL BINS AND A CONCRETE MIXER

THIS TRUCK IS EQUIPPED WITH AN AIR COMPRESSOR. THE BODY WILL HOLD A PLOW AND SMALL SCRAPER. THERE IS A TOOL BOX UNDER THE MATERIAL BINS

NEW BUREAU EXHIBIT MATERIAL

Eleven flexible exhibit booths have been completed recently by the Bureau. These were displayed for the first time at the American Road Builders's Association Convention held in the Coliseum in Chicago from January 11 to 15, 1926.

The subject matter is presented in an attractive pictorial form as well as by lettering, statistics and graphic charts. The subjects treated are of three general classes: Those of interest to (1) the general public; (2) a technical audience; and (3) both the general public and a technical audience.

A single booth consists of three panels, each 5 feet 6 inches long by 4 feet 10 inches high and mounted on folding iron pipe legs so that the top of the panels is 7 feet 3 inches above the floor. The panel frames at the greatest dimension are 1-3/8 inches thick. Burlap curtains skirt the base of the panels and a removable wooden title bar is fixed in dowel holes in the top of the center panel.

The booths are packed in complete units in a wooden crate with a shipping weight of 296 pounds. The crates are 5 feet by 6 feet 6 inches by 7 inches deep, outside dimensions.

The flexible nature of the booths makes them adaptable to almost any shape of space. They may be displayed in a straight line as a wall chart; in a triangular form around the supporting column of a building; and in a trapezoidal or hollow square shape as an ordinary booth.

The booths are available for display before road conventions, agricultural and automobile shows, colleges, etc. Applications for loan should be made to the Office of Exhibits, U. S. Department of Agriculture, by all outside the Bureau. District engineers of the Bureau should transmit requests direct to our Washington headquarters office.

Photographs of six of the eleven flexible booths shown at Chicago appear in this number of the NEWS LETTER. The other five will be included in a subsequent issue.


SUBGRADE SOILS
Write the Bureau of Public Roads
Field methods for identifying good and bad subgrade soils by the use of simple equipment and survey bulletins of the U.S. Bureau of Soils have been developed by the Bureau of Public Roads. Write for copies of the magazine Public Roads containing a description of the methods.
A WISE MAN BUILDETH HIS HOUSE UPON A ROCK
SUBGRADE SOILS SHOULD ALWAYS BE INVESTIGATED
A FIRM FOUNDATION IS THE MEASURE OF THE STABILITY OF ROAD SURFACING.
LOOK OUT FOR THE CLAY SOILS
Analyze your subgrade soils. Spot them on the chart. The black spot represents a soil composed of 56% Clay 37% Silt 7% Sand
The soils below the green line make good subgrades.
The soils above the green line make poor or doubtful subgrades.
CLAY
CLAY
LINE OF ZERO SILT
LINE OF ZERO SAND
SANDY CLAY LOAM
SILTY CLAY LOAM
DANGER LINE
SANDY LOAM LOAM
Very Fine, Fine, Medium, Course
SAND
SILT LOAM
LINE OF ZERO CLAY
SAND
SILT

UNITED STATES DEPARTMENT OF AGRICULTURE
BUREAU OF PUBLIC ROADS

STATUS OF FEDERAL AID ROAD CONSTRUCTION FUNDS

AS OF DECEMBER 31, 1926

B.P.R. - F.A. - A - 1
M - Dec. 31, 1926-A

STATES	1 APPORTIONMENT FROM JULY 11, 1916 TO DATE	2 ALLOTTED TO PROJECTS (SEE COLUMN 6 FOR DETAILS)		3 PLACED UNDER CONSTRUCTION		4 PAID TO STATES	5 BALANCE OF APPORTIONMENTS		6 ALLOTMENTS TO PROJECTS (SUBDIVISION OF AMOUNTS SHOWN IN COLUMN 2)						STATES
							NOT ALLOTTED TO PROJECTS (COLUMN 1-2)	NOT YET PLACED UNDER CONSTRUCTION (COLUMN 1-3)	COMPLETED AND PAID		AGREEMENT STAGE		P.S.&E. STAGE RECOMMENDED BY DISTRICT ENGINEER		
		FEDERAL AID	MILES	FEDERAL AID	MILES				FEDERAL AID	MILES	FEDERAL AID	MILES	FEDERAL AID	MILES	
ALABAMA	$ 14,349,455.00	$ 10,801,543.31	1,469.3	$ 10,369,506.97	1,441.1	$ 9,245,815.55	$ 3,547,911.69	$ 3,979,848.03	$ 5,132,389.71	1,010.1	$ 4,202,447.99	431.0	$ 466,705.61	28.2	ALABAMA
ARIZONA	9,617,249.00	5,632,506.32	813.6	6,424,355.62	785.9	6,080,570.69	3,084,742.68	3,192,893.38	5,589,578.50	694.2	942,927.82	119.4			ARIZONA
ARKANSAS	11,505,804.00	10,071,052.23	1,655.1	9,733,213.34	1,602.7	8,546,754.73	1,534,751.77	1,872,590.66	6,698,976.17	1,176.9	2,755,122.17	350.3	615,953.89	115.9	ARKANSAS
CALIFORNIA	22,072,815.00	17,824,515.24	1,323.5	17,531,190.13	1,306.9	14,528,437.33	4,248,299.76	4,541,624.87	11,630,552.24	942.2	5,436,514.61	317.0	758,348.49	54.3	CALIFORNIA
COLORADO	12,325,812.00	9,040,441.35	950.5	8,785,229.01	926.9	7,776,322.13	3,285,370.65	3,539,582.99	5,560,222.13	688.9	2,039,359.22	192.1	440,860.00	69.5	COLORADO
CONNECTICUT	4,333,681.00	2,722,618.43	147.8	2,659,840.48	144.1	2,983,683.42	1,611,062.57	1,673,840.62	2,069,580.80	115.0	530,235.48	25.4	122,802.15	7.4	CONNECTICUT
DELAWARE	2,474,058.00	2,106,520.35	152.6	2,097,520.35	142.1	1,847,333.72	367,537.65	376,537.65	1,708,735.60	119.4	388,784.75	22.7	9,000.00	10.6	DELAWARE
FLORIDA	2,084,954.00	5,684,043.26	405.7	5,382,496.26	385.6	4,535,891.82	1,400,910.74	1,702,467.74	1,405,487.97	95.3	4,370,709.50	251.8	907,845.69	57.5	FLORIDA
GEORGIA	18,431,953.00	16,600,865.88	2,420.8	15,981,853.77	2,334.3	14,156,253.99	1,931,087.02	2,450,089.23	10,697,300.71	1,635.3	4,878,035.68	555.5	925,528.59	130.0	GEORGIA
IDAHO	8,559,527.00	7,288,217.72	847.7	5,940,313.27	830.7	6,195,905.35	1,271,409.28	1,619,313.73	4,937,290.74	524.7	1,624,181.72	180.0	726,745.26	43.0	IDAHO
ILLINOIS	29,832,196.00	23,157,949.26	1,553.2	23,157,949.26	1,553.2	21,836,104.55	6,674,246.74	6,674,246.74	19,087,947.67	1,268.3	3,886,832.82	272.4	183,108.77	12.5	ILLINOIS
INDIANA	18,204,355.00	15,821,687.13	972.8	15,552,340.61	955.2	12,976,742.55	2,382,667.87	2,652,014.39	7,106,938.52	463.3	8,462,065.53	495.3	252,523.08	14.2	INDIANA
IOWA	19,485,563.00	15,456,931.54	2,544.4	14,852,227.64	2,504.9	13,506,611.42	4,028,631.46	4,633,335.36	11,427,868.06	2,033.4	3,781,704.63	575.4	247,368.85	35.5	IOWA
KANSAS	19,464,411.00	16,390,579.85	1,694.8	15,673,882.66	1,529.3	14,055,921.90	3,073,831.15	3,790,528.34	11,266,854.02	1,037.5	4,091,774.14	428.3	1,031,951.69	229.0	KANSAS
KENTUCKY	13,212,809.00	10,725,459.77	972.2	10,550,150.70	955.4	9,399,575.16	2,486,349.23	2,662,658.30	7,131,339.63	653.3	3,254,883.83	290.1	330,236.31	28.8	KENTUCKY
LOUISIANA	9,272,408.00	7,416,057.43	1,139.4	7,237,932.07	1,136.6	6,704,068.59	1,856,350.57	2,034,475.93	5,691,182.90	992.6	1,608,297.38	130.5	116,577.15	16.9	LOUISIANA
MAINE	6,464,828.00	4,951,349.62	365.8	4,256,959.20	357.4	4,232,215.10	1,513,478.38	1,507,868.20	4,031,472.38	291.2	908,248.73	74.6	11,592.51		MAINE
MARYLAND	5,325,057.00	5,270,226.26	435.4	5,270,226.26	435.4	4,441,752.35	654,830.74	654,830.74	4,040,485.11	310.1	1,229,741.15	125.3			MARYLAND
MASSACHUSETTS	10,108,725.00	7,435,525.05	406.7	7,330,525.05	401.4	6,157,743.54	2,673,200.94	2,778,200.94	5,738,772.39	321.0	1,628,705.60	83.4	68,046.07	2.3	MASSACHUSETTS
MICHIGAN	20,342,365.00	15,738,985.37	1,177.1	15,530,215.80	1,165.2	14,213,011.35	4,603,378.63	4,812,148.20	10,329,646.40	864.4	5,054,530.93	285.7	354,809.04	27.0	MICHIGAN
MINNESOTA	19,591,780.00	17,479,915.56	3,555.2	17,380,015.56	3,540.5	16,561,960.74	2,111,863.44	2,211,753.44	15,023,615.56	3,118.2	2,157,800.00	493.8	268,500.00	43.2	MINNESOTA
MISSISSIPPI	12,128,018.00	10,429,559.32	1,429.2	9,920,629.07	1,365.6	8,617,446.28	1,698,458.68	2,207,388.93	5,814,351.32	933.4	3,867,349.28	390.1	747,358.72	105.7	MISSISSIPPI
MISSOURI	22,786,435.00	20,186,200.90	2,038.0	20,137,583.01	2,008.8	15,235,110.35	2,600,235.10	2,648,852.99	10,082,630.35	1,292.3	9,557,235.32	701.7	546,334.23	44.0	MISSOURI
MONTANA	13,424,885.00	7,710,138.73	1,285.9	7,132,820.36	1,155.8	6,644,350.30	5,714,746.27	6,292,064.64	5,818,420.25	983.8	1,224,405.39	270.0	57,313.09	33.1	MONTANA
NEBRASKA	14,636,236.00	10,693,394.00	2,811.2	10,428,591.45	2,761.3	8,115,843.65	3,941,841.00	4,206,643.55	5,126,313.75	1,590.9	5,291,155.90	1,079.7	275,921.35	41.6	NEBRASKA
NEVADA	8,795,215.00	7,745,621.51	850.9	7,745,621.51	850.9	7,115,805.96	1,049,593.49	1,048,593.49	4,063,120.14	459.9	3,644,092.58	390.5	38,408.79	1.5	NEVADA
NEW HAMPSHIRE	3,169,492.00	2,658,144.17	255.7	2,563,154.61	255.2	2,349,450.05	511,347.83	515,337.39	2,250,767.07	228.3	389,195.36	25.3	25,190.74	2.1	NEW HAMPSHIRE
NEW JERSEY	8,457,420.00	7,481,739.17	310.6	7,481,739.17	310.6	6,149,439.85	985,680.83	985,680.83	4,316,118.45	248.5	3,135,520.72	58.5	30,000.00	3.6	NEW JERSEY
NEW MEXICO	10,972,386.00	8,222,012.83	1,532.5	8,175,254.93	1,527.2	7,470,931.78	2,750,373.17	2,797,131.07	7,085,610.37	1,383.0	902,836.66	128.6	233,565.80	21.0	NEW MEXICO
NEW YORK	34,045,195.00	27,106,970.54	1,777.3	24,876,780.64	1,528.2	19,763,788.33	6,938,224.36	9,168,414.36	14,972,156.69	1,000.3	11,416,514.05	729.1	718,200.00	47.9	NEW YORK
NORTH CAROLINA	15,717,206.00	14,002,068.01	1,424.4	13,404,814.44	1,389.4	12,329,753.32	1,715,137.99	2,312,391.56	9,807,986.33	1,186.9	3,304,843.08	201.4	889,238.50	36.1	NORTH CAROLINA
NORTH DAKOTA	10,738,559.00	8,242,506.80	2,721.8	7,817,323.54	2,615.0	5,499,467.53	2,506,152.20	2,931,335.46	5,522,028.84	2,074.8	1,930,306.35	491.0	689,571.61	156.0	NORTH DAKOTA
OHIO	25,731,796.00	21,228,969.94	1,675.0	20,567,159.30	1,621.4	18,544,282.22	4,502,826.16	5,164,636.70	15,235,887.10	1,276.4	4,174,742.66	333.0	817,340.08	56.6	OHIO
OKLAHOMA	15,059,767.00	14,155,718.39	1,277.6	13,937,971.54	1,257.5	12,673,308.08	1,894,068.51	2,121,815.46	10,500,930.81	939.4	3,136,168.72	301.3	428,528.86	35.3	OKLAHOMA
OREGON	10,879,347.00	9,559,403.26	1,022.9	9,554,403.26	1,014.1	8,740,521.92	1,319,943.74	1,324,943.74	7,909,700.99	869.9	1,593,174.59	139.9	56,527.58	13.1	OREGON
PENNSYLVANIA	31,338,751.00	27,639,631.90	1,618.5	27,255,808.89	1,592.8	24,608,130.20	3,699,149.10	4,082,972.11	17,541,753.42	931.2	9,692,637.55	551.4	405,230.93	25.9	PENNSYLVANIA
RHODE ISLAND	2,567,569.00	1,991,815.35	115.2	1,928,680.35	111.0	1,371,323.50	675,753.65	738,888.65	1,274,676.72	70.8	513,408.63	31.2	197,730.00	13.2	RHODE ISLAND
SOUTH CAROLINA	9,801,524.00	8,908,638.54	1,715.8	8,363,652.66	1,639.7	7,535,829.04	892,885.46	1,437,871.34	5,633,828.79	1,294.5	2,595,265.95	331.2	679,543.80	90.1	SOUTH CAROLINA
SOUTH DAKOTA	11,166,790.00	9,884,117.13	2,590.2	9,884,117.13	2,590.2	8,814,838.01	1,282,672.87	1,282,672.87	6,935,608.32	1,694.5	2,889,595.37	881.4	58,912.44	14.2	SOUTH DAKOTA
TENNESSEE	15,280,531.00	12,305,934.21	951.9	12,652,725.27	930.6	11,329,210.66	2,374,596.79	2,627,805.73	8,133,717.80	604.0	4,273,030.00	313.8	499,186.41	44.1	TENNESSEE
TEXAS	40,506,431.00	35,525,790.16	5,841.0	33,603,451.25	5,586.4	29,497,001.07	4,979,540.84	7,102,979.75	24,125,957.83	4,363.9	9,261,505.49	1,309.6	2,239,226.84	161.5	TEXAS
UTAH	7,618,779.00	6,316,768.82	701.4	6,127,998.22	685.5	5,489,835.33	1,602,010.18	1,690,780.78	3,918,717.26	429.0	2,137,700.03	247.3	250,351.53	25.1	UTAH
VERMONT	3,268,507.00	2,465,710.02	157.6	2,437,113.97	157.5	2,009,108.78	801,796.98	831,393.03	1,552,976.48	111.3	860,588.41	46.1	53,145.13	0.2	VERMONT
VIRGINIA	13,501,514.00	12,019,978.16	1,129.9	11,644,143.26	1,097.0	10,507,774.96	1,481,535.84	1,857,370.74	8,940,235.53	888.9	2,875,004.54	220.3	203,737.99	20.7	VIRGINIA
WASHINGTON	10,145,776.00	8,618,773.78	691.5	8,357,773.78	690.3	7,714,897.82	1,527,002.22	1,788,002.22	7,405,373.78	547.2	652,400.00	42.2	561,000.00	2.1	WASHINGTON
WEST VIRGINIA	7,352,511.00	6,440,056.76	553.8	5,141,141.22	525.1	5,064,002.08	912,454.24	1,211,369.79	3,353,307.22	339.5	2,921,790.79	195.9	164,958.75	17.4	WEST VIRGINIA
WISCONSIN	17,438,815.00	12,296,180.05	1,793.5	12,198,139.05	1,778.2	10,389,329.06	5,143,634.95	5,240,575.95	9,338,646.63	1,497.4	2,319,708.93	221.1	636,824.49	75.0	WISCONSIN
WYOMING	8,565,274.00	7,541,462.49	1,293.6	7,523,114.49	1,293.6	6,955,232.61	1,024,811.51	1,043,159.51	5,632,430.48	1,079.2	1,850,582.01	214.4	58,350.00		WYOMING
HAWAII	1,100,153.00	97,440.00	6.5	97,440.00	5.5	39,293.62	1,002,713.00	1,002,713.00			97,440.00	5.5			HAWAII
TOTALS	$ 671,375,000.00	$ 551,603,798.58	64788.1	$ 536,248,252.39	62993.8	$ 470,970,152.45	$ 118,771,201.42	$ 135,126,747.61	$ 371,701,144.42	46976.6	$ 160,462,217.14	15779.2	$ 13,440,437.02	2032.3	TOTALS